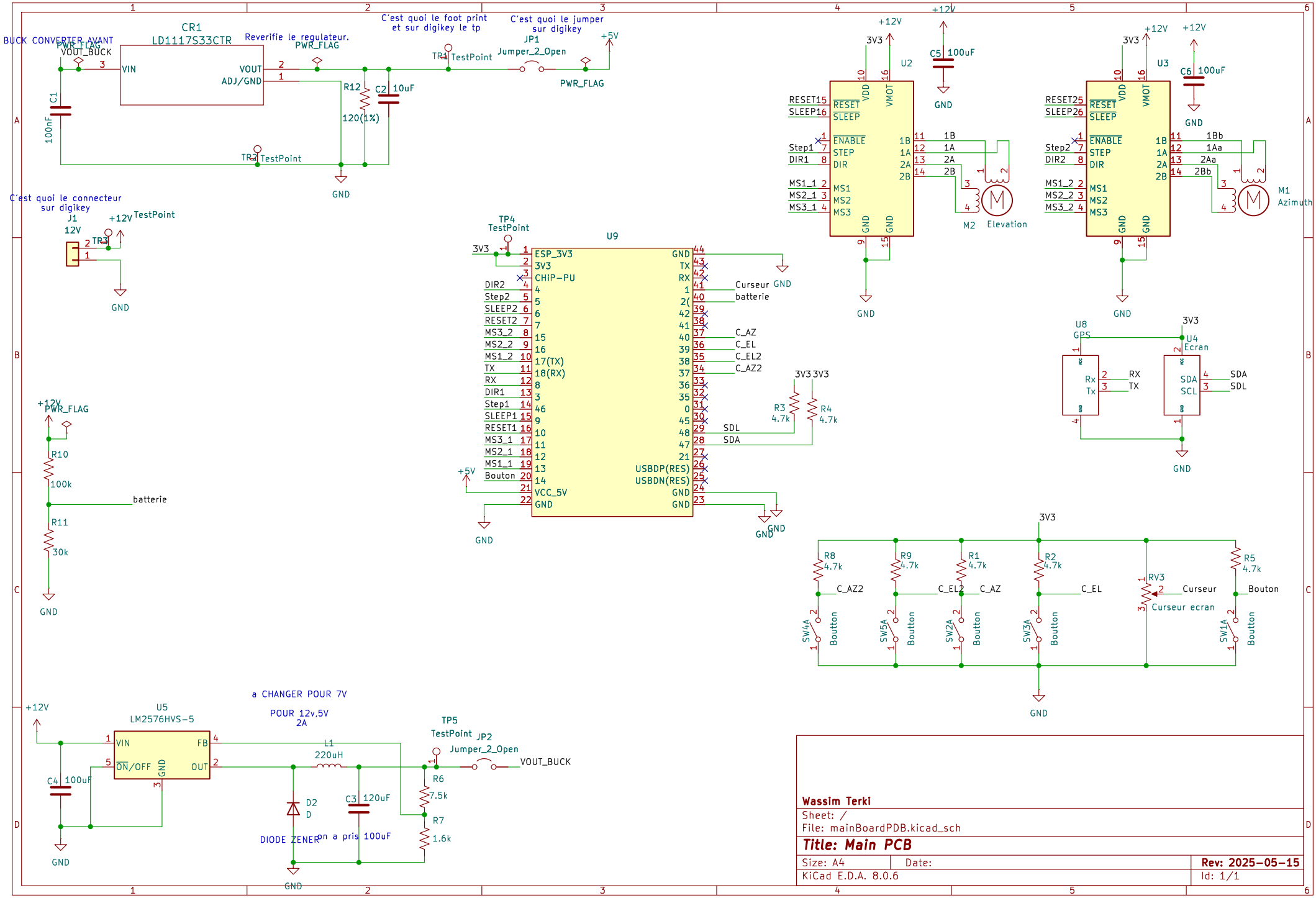

Wassim Terki

Sheet: /

File: mainBoardPDB.kicad_sch

Title: Main PCB

Size: A4	Date:	**Rev: 2025-05-15**
KiCad E.D.A. 8.0.6		Id: 1/1